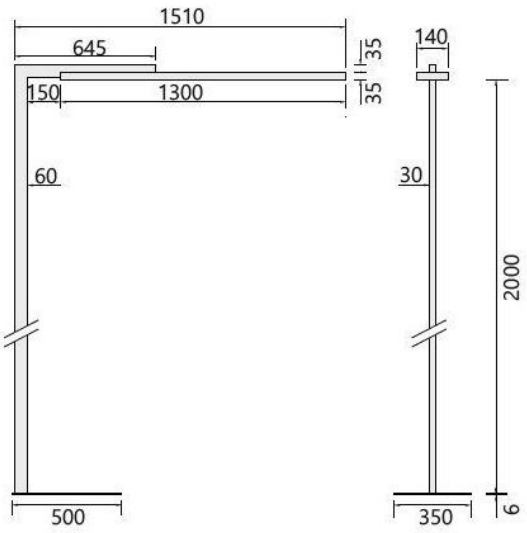

Byok

Grado L

Oberfläche

- Matt aluminium
- noir mat
- blanc mat

Dimmbarkeit

- dimmable DALI
- Capteur de lumière du jour et le mouvement avec capteur pour Uplight

Technical details

Pays de fabrication	Allemagne
fabricant	Byok
concepteur	Kai Byok
protection	IP20
Contenu de la livraison	LED
aptitude de tension	230 - 240 Volt
Projection en cm	151
matériel	aluminium
longueur de câble	300 cm
Puissance en Watt	87 W
Indice de rendu des couleurs	80
La température de couleur en Kelvin	3.000 blanc chaud
Pied de lampe dimensions	50 x 35 cm
Flux lumineux total en LM	14.000
répartition de la lumière	directement et indirectement
Dimensions	H 204 cm

Description

The Byok Grado L is a floor lamp with a 151 cm long arm. The lamp can be fixed directly to the furniture or be positioned movably with one base. It is particularly suitable for a single workstation. The Grado L 2 and T 4 from the series are also available for up to two or four workstations. The Grado L emits light simultaneously upwards and downwards. It is available in three versions: DALI dimmable or with an integrated daylight and motion sensor with an additional sensor for uplight. The surfaces available are matt anodised aluminum, matt white and matt black. As standard, this floor lamp is supplied with a colour temperature of 3,000 Kelvin warm white, on request it is also offered with 4,000 Kelvin white.